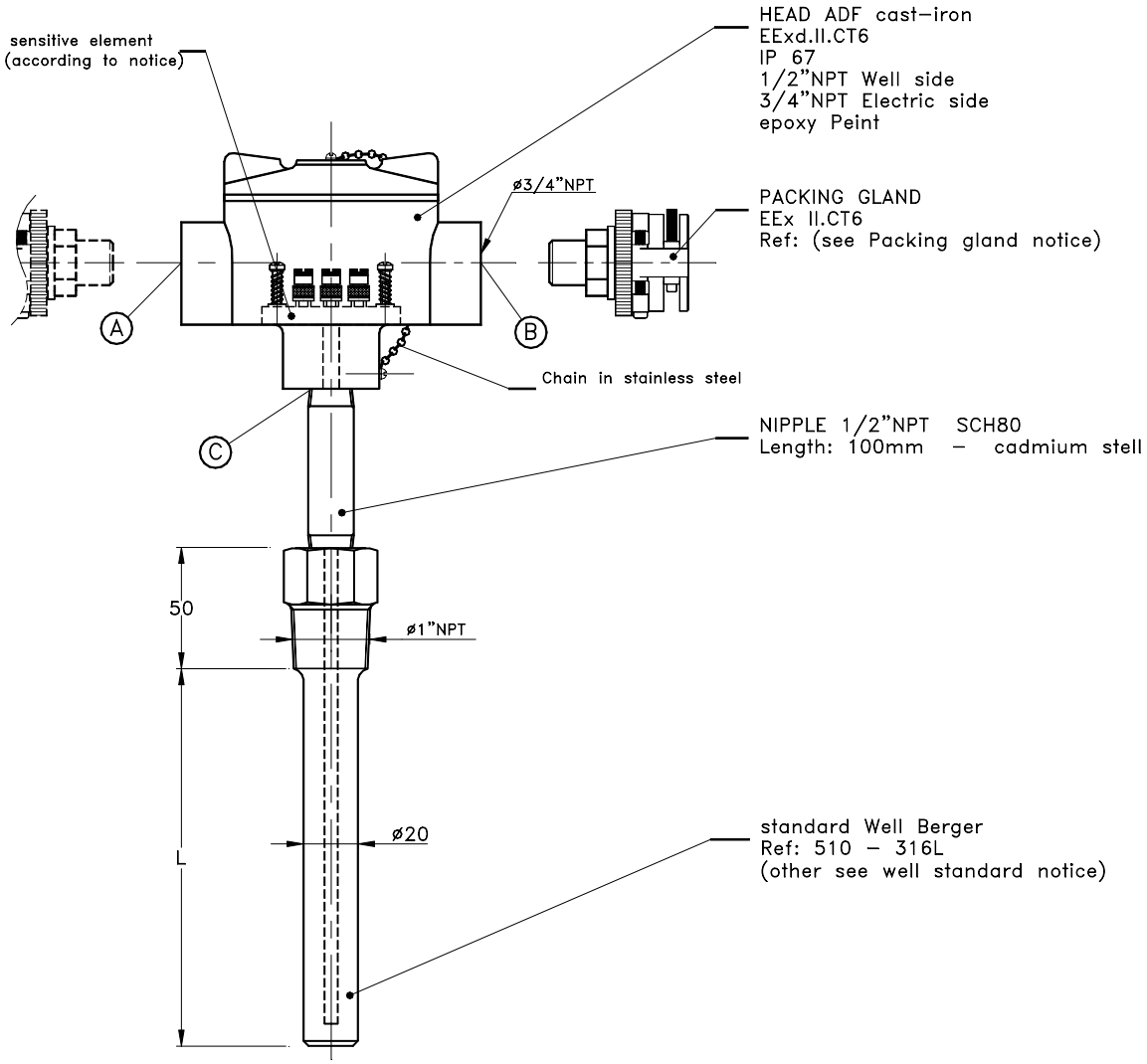# Assembly 2500